INTEGRATED OIL SEPARATOR PA

WITH COALESCING FILTER EFFICIENCY < 5 mg/l
For light mineral liquids (e.g. oil and petrol)

PRODUCT DESCRIPTION

ESEP concrete prefabricated **"High efficiency PA-certified integrated oil separator"** for light mineral fluids with integrated sludge trap, **series PA-KMI 7010-5.0, capacity 10 l/s.** Resistant against mineral liquids by means of internal surface treatment using a watertight concrete layer followed by two-component epoxy coating. Equipped with HDPE odour trap on the inlet side and HDPE automatic closure device on the outlet side. Manhole cover in full cast iron or a cast iron-concrete combination. Fitted with coalescing filter.

APPLICATIONS

Oil and sludge separators are frequently used when light liquids (e.g. oil and petrol) might be released into the water flow, for example in:

- Automotive companies
- Engine overhauling
- Petrol stations
- Car washes
- Industrial areas
- Parking lots
- Storage areas
- Environmental parks
- Unloading zones

QUALITY

- Capacity calculated, dimensioned and tested in accordance with NEN-EN 858, with stainless steel odour trap on the inlet side and stainless steel automatic closure device on the outlet side
- Concrete quality in accordance with NEN-EN 206-1 and NEN-EN 8005, minimum C60/75 environmental classification XA3
- CE certified

Manhole cover:
- Cast iron-concrete combination conform NEN-EN 124 class B 125 kN
- or class D 400 kN wheel pressure

DRAWING

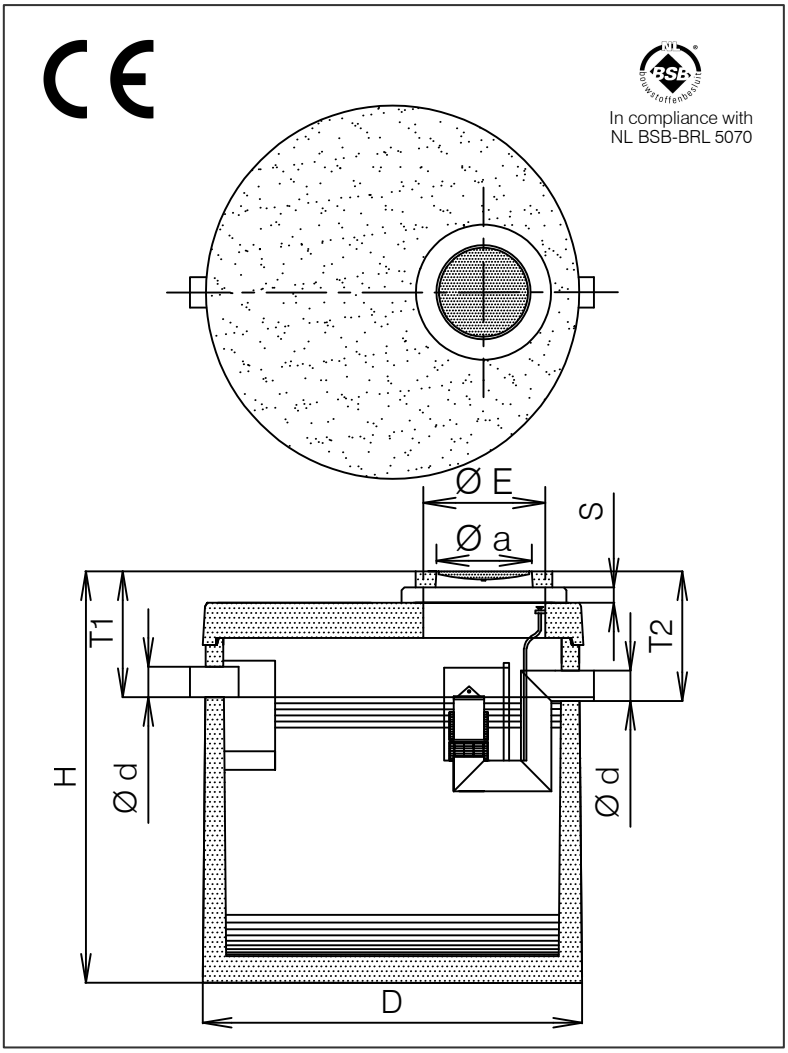

SPECIFICATIONS

Type	l/s	I*	O*	Ø D	Ø d	H	T 1	T 2	Ø E	Ø a	Kg.	Kg.*
PA-KMCI 7010-5.0	10	5015	919	2240	160	2910	675	700	800	610	8110	5981

I* = Volume of the sludge trap (litres).
O* = Oil storage volume (litres).
S = Adjustable height by using concrete extension rings.
Available in heights 100, 200 and 300 mm. To be installed watertight on-site.
Kg.* = Weight heaviest part

** N.B. Maximum level of ground covering 500 mm. When high groundwater level, intensive heavy traffic, or deeper placement is present, extra precautions have to be made. Factory warranty on water tightness up to the usual aquiferous range.

***ESEP* Milieutechniek B.V.** | NL: Celsiusstraat 20, 6003 DG Weert T: +31 495 543 430 F: +31 495 532 135 info@esep.nl
T: +32 11 2416 49 F: +32 11 2426 30 www.esep.nl